OPTERRA ENERGY SERVICES | EASTERN MICHIGAN UNIVERSITY

An ENGIE company

The Power of Partnership

Eastern Michigan University & OpTerra Energy Services

John Donegan, Vice President for Operations and Facilities, EMU
Kenneth Hedrick, Director of Business Development, OpTerra
Frank Gallardo, Senior Project Development Manager, OpTerra

EMU Heating Plant History

OPTERRA
ENERGY SERVICES

1951
Original Plant Installation

- Boiler #4– 48 MMBTUH
- Boiler #3– 48 MMBTUH

1967
Plant Expansion

- Boiler #1—120 MMBTUH
- Boiler #2—120 MMBTUH

1987
Cogeneration Plant

- 4.6 MW Natural Gas Turbine (150 ppm NOx)
- Boiler #4—58.6 MMBTU HRSG, includes 29.7 MMBTU Duct Burner
- Utility Interconnection

2007
Phase I of OpTerra Partnership

2015-today
Phase II of OpTerra Partnership

For over half a century, Eastern Michigan University's plant provided energy to the Main Campus. EMU partnered with OpTerra in 2007 to reach facility upgrades goals:

- Make spaces more efficient to operate
- Increase comfort for students and faculty

Six years later, EMU looked to further positive impact through continued performance improvements in the heating plant.

© 2017 **OPTERRA** ENERGY SERVICES, INC. Unauthorized use or duplication of this material without the express, written permission of the owner is strictly prohibited.

Old Facilities, New Opportunities

OPTERRA
ENERGY SERVICES

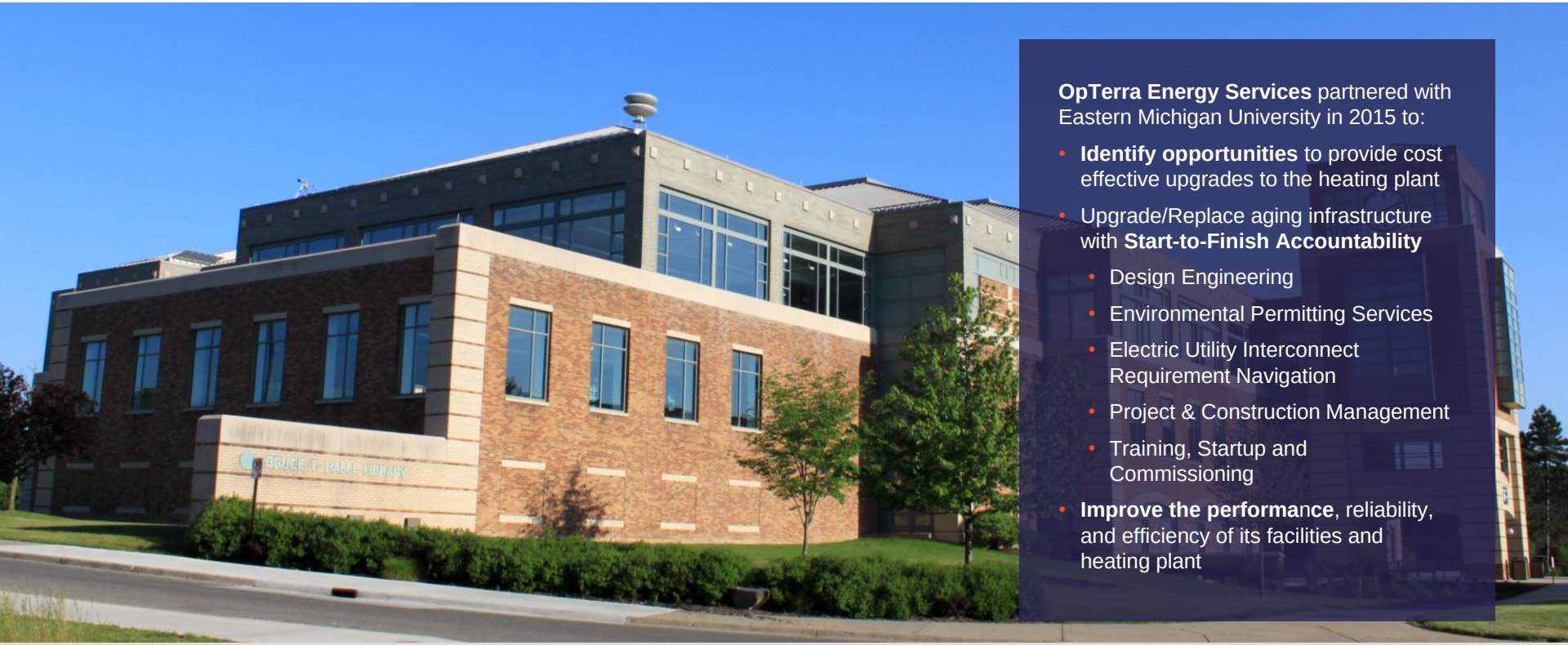

OpTerra Energy Services partnered with Eastern Michigan University in 2015 to:

- **Identify opportunities** to provide cost effective upgrades to the heating plant
- Upgrade/Replace aging infrastructure with **Start-to-Finish Accountability**
  - Design Engineering
  - Environmental Permitting Services
  - Electric Utility Interconnect Requirement Navigation
  - Project & Construction Management
  - Training, Startup and Commissioning
- **Improve the performance**, reliability, and efficiency of its facilities and heating plant

© 2017 **OPTERRA** ENERGY SERVICES, INC. Unauthorized use or duplication of this material without the express, written permission of the owner is strictly prohibited.

Comprehensive Project Scope

OPTERRA
ENERGY SERVICES

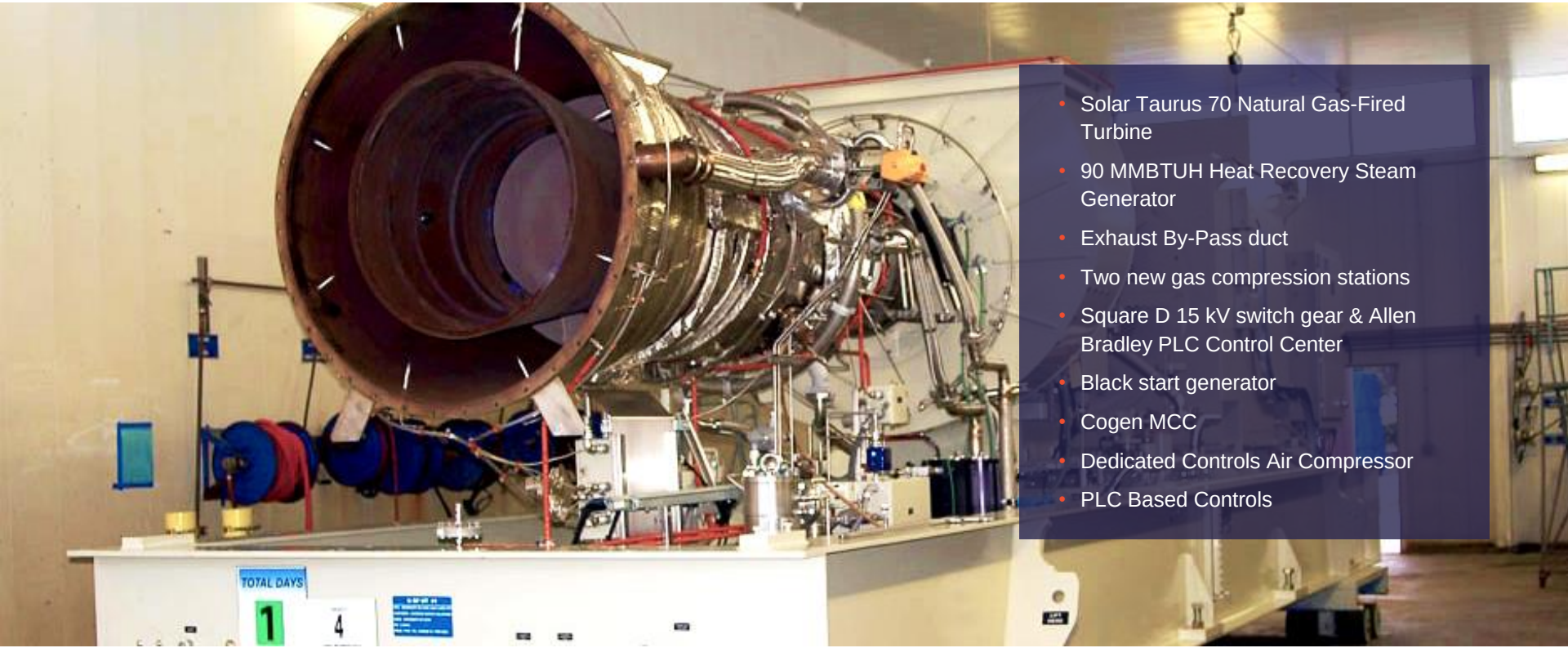

- Solar Taurus 70 Natural Gas-Fired Turbine
- 90 MMBTUH Heat Recovery Steam Generator
- Exhaust By-Pass duct
- Two new gas compression stations
- Square D 15 kV switch gear & Allen Bradley PLC Control Center
- Black start generator
- Cogen MCC
- Dedicated Controls Air Compressor
- PLC Based Controls

© 2017 **OPTERRA** ENERGY SERVICES, INC. Unauthorized use or duplication of this material without the express, written permission of the owner is strictly prohibited.

Coral Substation Electrical One-Line

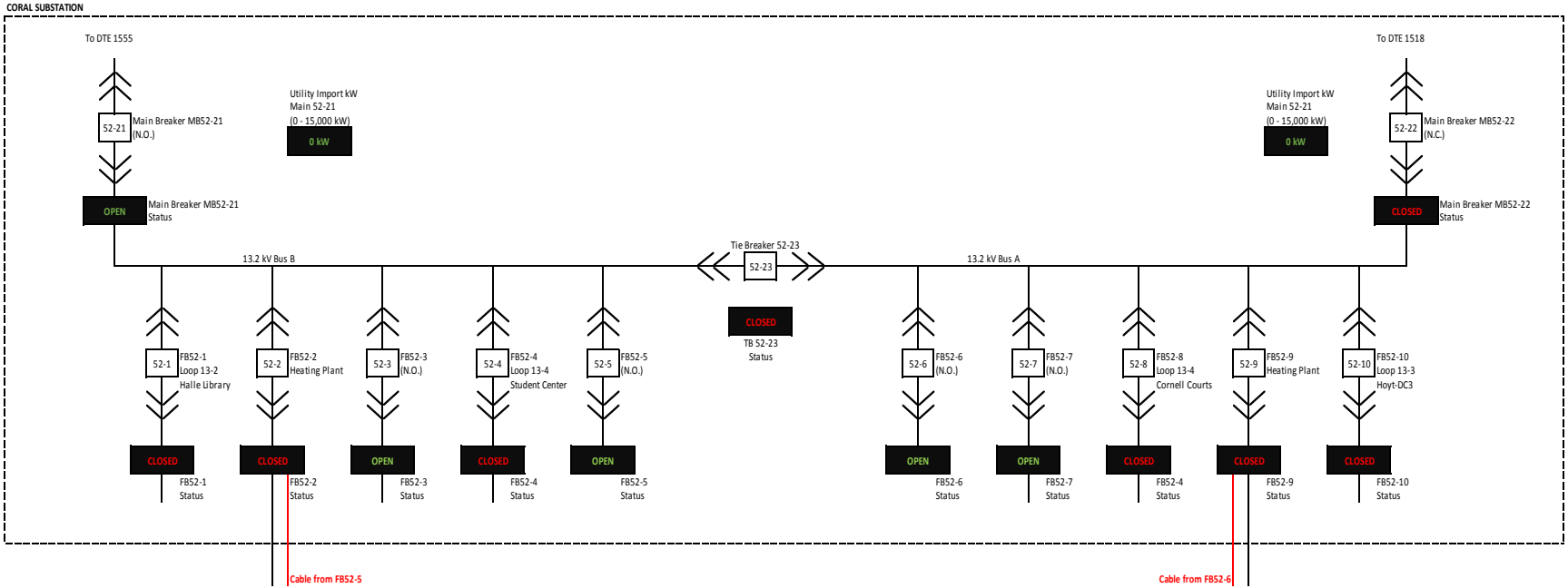

© 2017 **OPTERRA** ENERGY SERVICES, INC. Unauthorized use or duplication of this material without the express, written permission of the owner is strictly prohibited.

New Heating Plant 13.2 kV One-Line

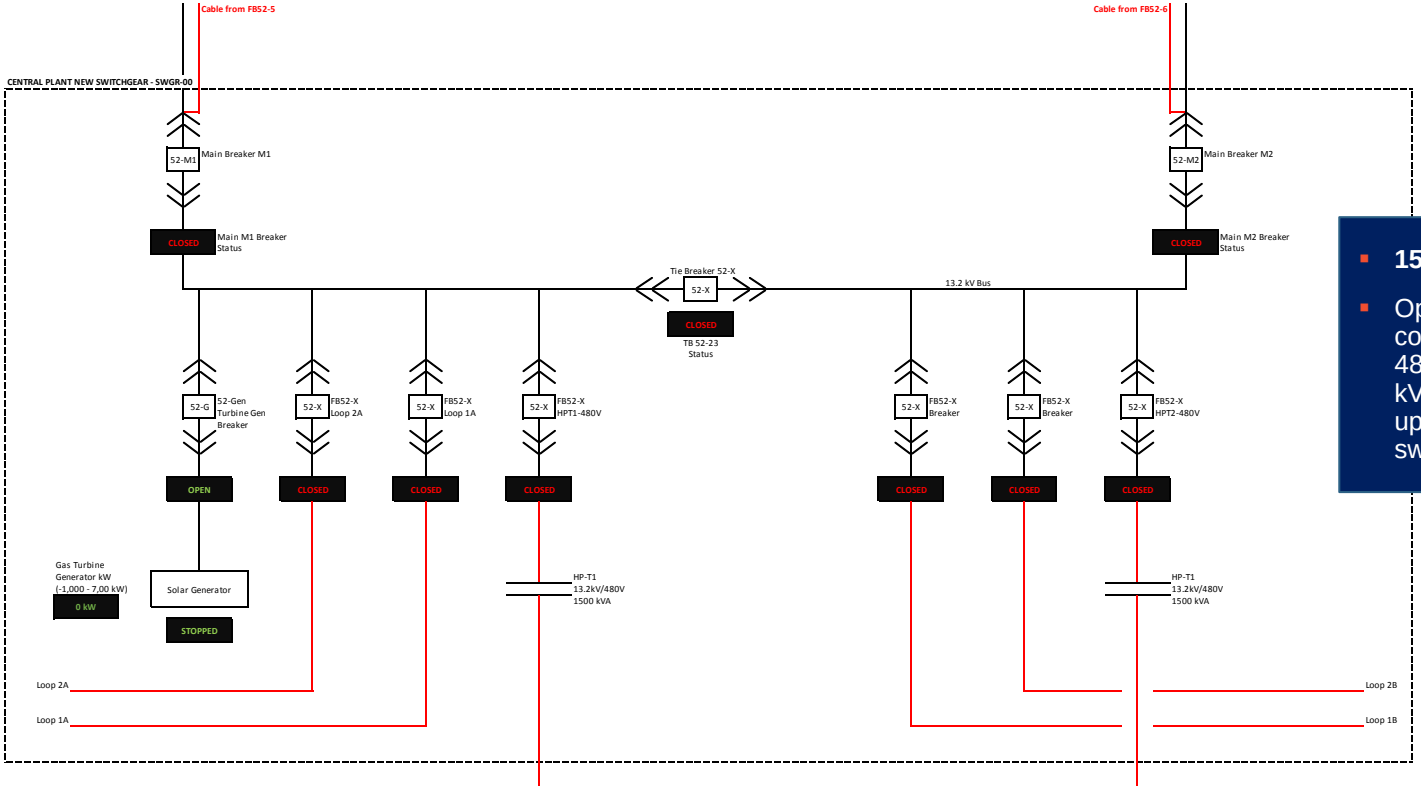

- **15 kV Switchgear**
- OpTerra and EMU are coordinating the upgrade of 4800 V loop feeds to 13.2 kV. Electrical One-Line is set up with new 15 kV switchgear

© 2017 **OPTERRA** ENERGY SERVICES, INC. Unauthorized use or duplication of this material without the express, written permission of the owner is strictly prohibited.

New EMU 480 V Unit Substation One-Line

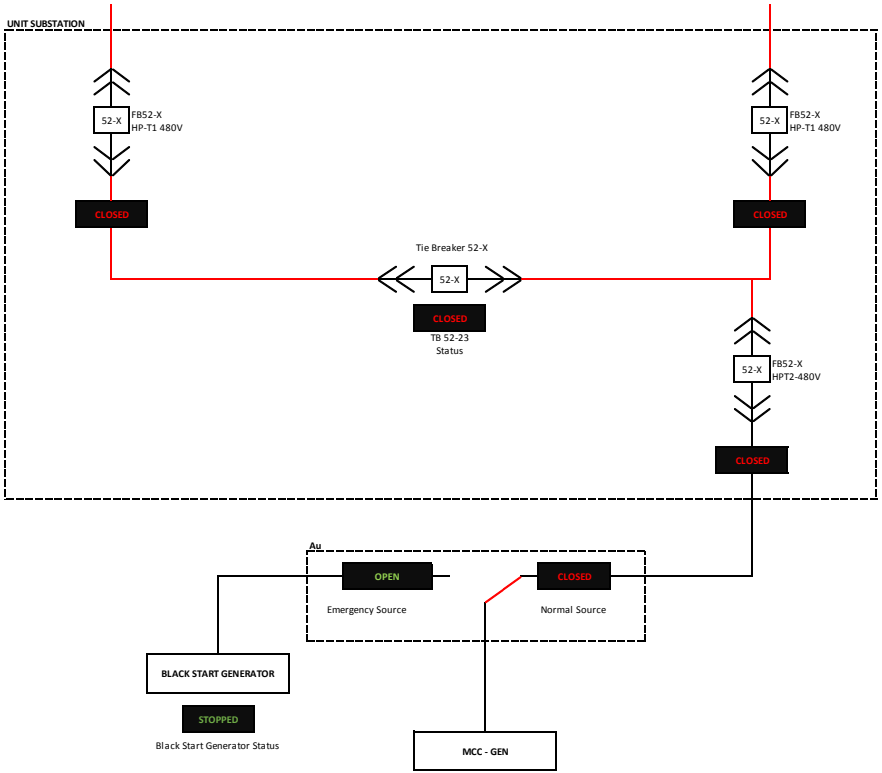

© 2017 **OPTERRA** ENERGY SERVICES, INC. Unauthorized use or duplication of this material without the express, written permission of the owner is strictly prohibited.

Major Plant Equipment Layout

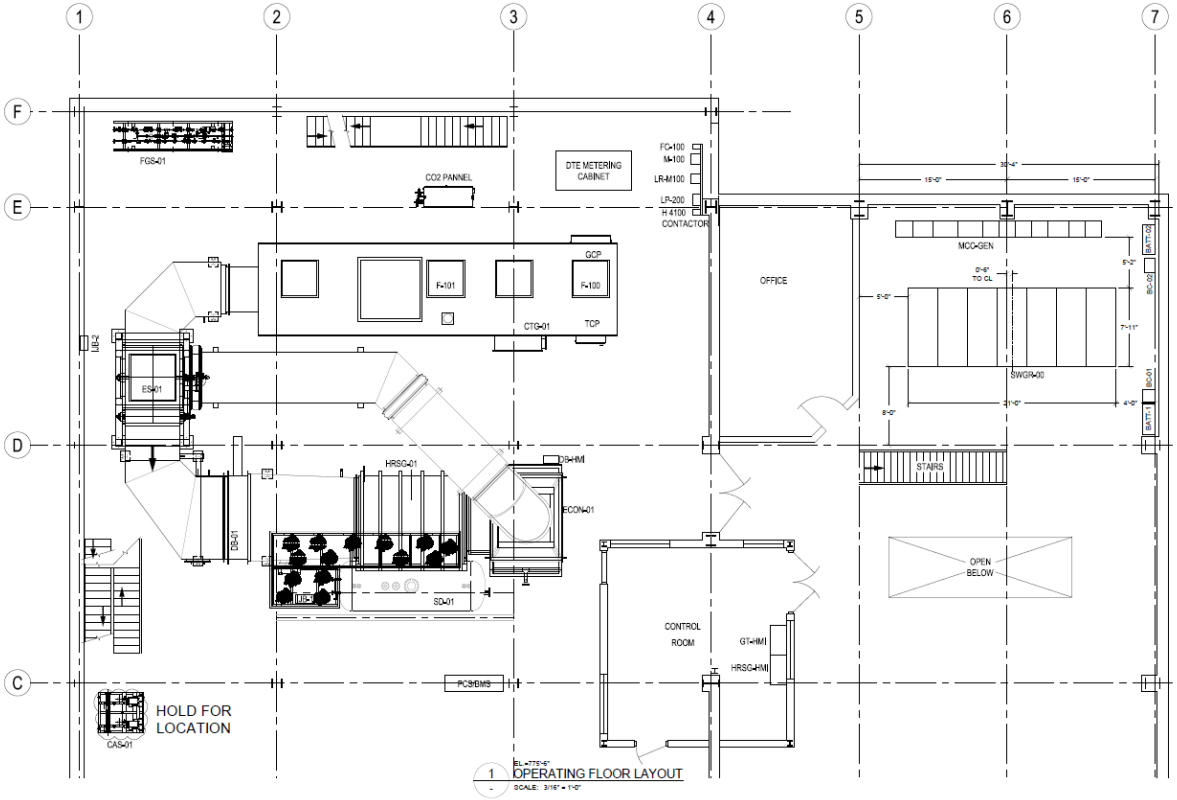

© 2017 **OPTERRA** ENERGY SERVICES, INC. Unauthorized use or duplication of this material without the express, written permission of the owner is strictly prohibited.

A Cascade-Effect of Benefits

OPTERRA
ENERGY SERVICES

The EMU-OpTerra partnership goes beyond new facility upgrades to generate impact:

- Safety
- Fiscal Sustainability
- Environmental Stewardship
- Improved learning environment

© 2017 **OPTERRA** ENERGY SERVICES, INC. Unauthorized use or duplication of this material without the express, written permission of the owner is strictly prohibited.

Greater Reliability

OPTERRA
ENERGY SERVICES

In the event of a major outage at the Utility, Eastern Michigan University will be in a position to **provide a safe haven for the surrounding community.**

- Provides redundancy through multiple modes of operation:
  - Electric Following with Import Control
  - Steam Process Control
  - Generator Output Control
  - Black Start (Total Loss of Utility)
- Eliminates nuisance power outage
- Less reliance on DTE Energy

© 2017 **OPTERRA** ENERGY SERVICES, INC. Unauthorized use or duplication of this material without the express, written permission of the owner is strictly prohibited.

Fiscal Stewardship

OPTERRA
ENERGY SERVICES

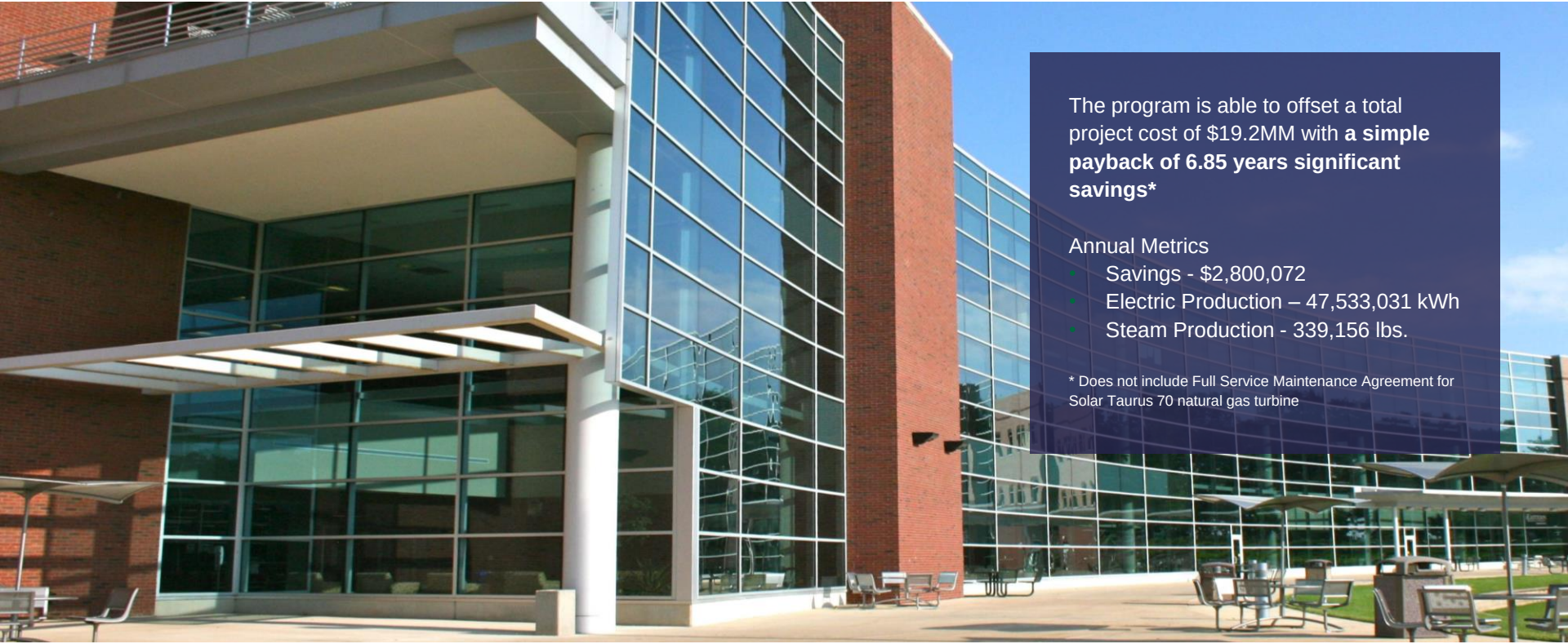

The program is able to offset a total project cost of $19.2MM with **a simple payback of 6.85 years significant savings***

Annual Metrics

- Savings - $2,800,072
- Electric Production – 47,533,031 kWh
- Steam Production - 339,156 lbs.

* Does not include Full Service Maintenance Agreement for Solar Taurus 70 natural gas turbine

© 2017 **OPTERRA** ENERGY SERVICES, INC. Unauthorized use or duplication of this material without the express, written permission of the owner is strictly prohibited.

Reduced Carbon Footprint

OPTERRA
ENERGY SERVICES

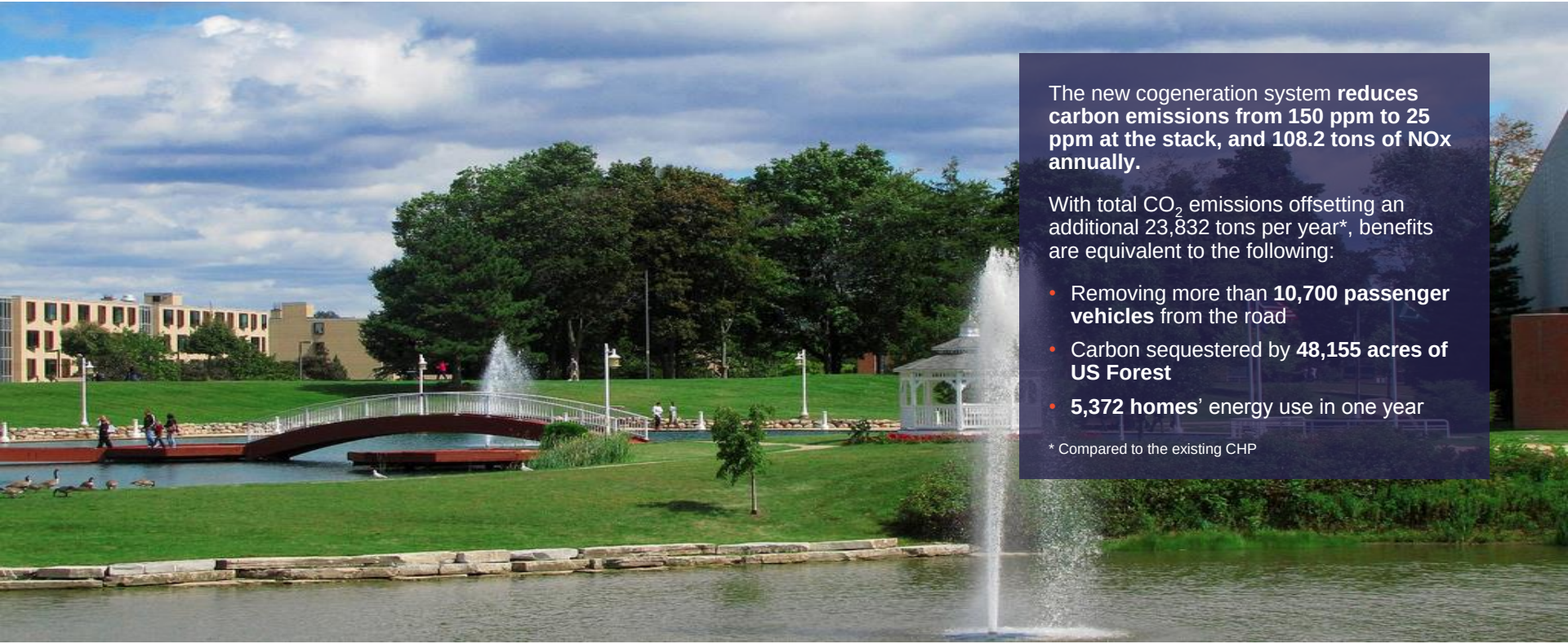

The new cogeneration system **reduces carbon emissions from 150 ppm to 25 ppm at the stack, and 108.2 tons of NOx annually.**

With total CO_2 emissions offsetting an additional 23,832 tons per year*, benefits are equivalent to the following:

- Removing more than **10,700 passenger vehicles** from the road
- Carbon sequestered by **48,155 acres of US Forest**
- **5,372 homes**' energy use in one year

* Compared to the existing CHP

© 2017 **OPTERRA** ENERGY SERVICES, INC. Unauthorized use or duplication of this material without the express, written permission of the owner is strictly prohibited.

Real-World Learning for Students

OPTERRA
ENERGY SERVICES

In addition to improving campus building comfort, upgrades **provide outlets for hands-on career development**:

- 8-week Internship Programs
- Job Shadowing Construction Managers
- Learning opportunities designed around modernization projects

© 2017 **OPTERRA** ENERGY SERVICES, INC. Unauthorized use or duplication of this material without the express, written permission of the owner is strictly prohibited.

Q & A

OPTERRA
ENERGY SERVICES

© 2017 **OPTERRA** ENERGY SERVICES, INC. Unauthorized use or duplication of this material without the express, written permission of the owner is strictly prohibited.

Appendix I: Technology Considerations

© 2017 **OPTERRA** ENERGY SERVICES, INC. Unauthorized use or duplication of this material without the express, written permission of the owner is strictly prohibited.

OpTerra Evaluation

OPTERRA
ENERGY SERVICES

Boilers	Fuel Cell(s)	Natural Gas Turbine(s)
▪ Steam provided by Heating Plant ▪ All electrical provided by local utility ▪ Minimal ROI	▪ Limited thermal recovery ▪ Large footprint ▪ High maintenance cost ▪ High first cost	▪ 1 Solar Centaur 50 with 1 HRSG ▪ 2 Solar Centaur 50 with 1/2 HRSGs ▪ **1 Solar Taurus 70 with 1 HRSG**

© 2017 **OPTERRA** ENERGY SERVICES, INC. Unauthorized use or duplication of this material without the express, written permission of the owner is strictly prohibited.

Hourly Simulation of the Solar Taurus

OPTERRA
ENERGY SERVICES

Taurus 70 CHP Plant Performance												
HRSG capacity = 90,000 lbm/hr												
		Yearly Totals	55,128,211	339,155,612	339,156	47,533,031		600,431	333,137,252	333,137	6,018	92,548
		Year Max	9,842	77,257	77	7,572	6,543	86.2	77,257	77	61	50.3
		Year Min	4,172.3	16,666.3	16.7	0.0	4,370.0	0.0	0.0	0.0	0.0	0.0
		Yearly Average	6,293	38,716	39	5,426	4,831	69	38,029	38	1	11
		EMU Data				**CHP Facility Totals**						
Hours	**Temp, °F**		**Power Demand, KW**	**Steam Demand, lb/hr**	**Thermal Demand, MMBTH**	**Net kWhrs**	**CHP Heat Rate, Btu/kWHR (HHV)**	**Turbine Fuel, MMBtu/hr (HHV)**	**Net Steam, lb/hr**	**Recovery, MMBTUH**	**Thermal Check**	**Duct Burner Fuel, MMBtu/hr (HHV)**
Peak Electric Day												
9/4/14 7:00 AM	56		7,255	21,155	21.155	6,505	6,002	76.3	21,155	21.155	0.000	0.0
9/4/14 8:00 AM	61		7,779	28,615	28.615	7,029	5,277	81.4	28,615	28.615	0.000	0.0
9/4/14 9:00 AM	67		8,336	31,565	31.565	7,137	5,040	82.6	31,565	31.565	0.000	0.0
9/4/14 10:00 AM	74		8,751	31,551	31.551	6,911	4,996	80.7	31,551	31.551	0.000	0.0
9/4/14 11:00 AM	79		9,091	32,510	32.510	6,746	4,877	79.4	32,510	32.510	0.000	0.0
9/4/14 12:00 PM	81		9,435	32,543	32.543	6,678	4,863	78.9	32,543	32.543	0.000	0.0
9/4/14 1:00 PM	83		9,576	31,965	31.965	6,608	4,903	78.3	31,965	31.965	0.000	0.0
9/4/14 2:00 PM	85		9,703	31,664	31.664	6,539	4,919	77.8	31,664	31.664	0.000	0.0
9/4/14 3:00 PM	85		9,842	31,442	31.442	6,539	4,940	77.8	31,442	31.442	0.000	0.0
9/4/14 4:00 PM	86		9,674	31,523	31.523	6,505	4,927	77.6	31,523	31.523	0.000	0.0
9/4/14 5:00 PM	85		9,358	31,766	31.766	6,539	4,910	77.8	31,766	31.766	0.000	0.0
9/4/14 6:00 PM	81		9,326	32,143	32.143	6,678	4,898	78.9	32,143	32.143	0.000	0.0
Peak Thermal Day'												
2/19/15 7:00 AM	-6		6,107	67,811	67.811	5,357	4,435	71.0	67,811	67.811	0.000	40.9
2/19/15 8:00 AM	-6		6,273	71,886	71.886	5,523	4,412	72.2	71,886	71.886	0.000	45.1
2/19/15 9:00 AM	-4		6,492	76,242	76.242	5,742	4,388	73.7	76,242	76.242	0.000	49.6
2/19/15 10:00 AM	-3		6,644	77,089	77.089	5,894	4,385	74.7	77,089	77.089	0.000	50.3
2/19/15 11:00 AM	2		7,032	77,257	77.257	6,282	4,386	77.0	77,257	77.257	0.000	49.9
2/19/15 12:00 PM	4		7,384	74,830	74.830	6,634	4,407	79.2	74,830	74.830	0.000	46.7
2/19/15 1:00 PM	4		7,495	73,010	73.010	6,745	4,421	80.0	73,010	73.010	0.000	44.5
2/19/15 2:00 PM	4		7,544	72,734	72.734	6,794	4,425	80.3	72,734	72.734	0.000	44.1
2/19/15 3:00 PM	4		7,512	72,803	72.803	6,762	4,423	80.1	72,803	72.803	0.000	44.2
2/19/15 4:00 PM	4		7,628	71,481	71.481	6,878	4,436	80.9	71,481	71.481	0.000	42.6
2/19/15 5:00 PM	4		7,585	70,408	70.408	6,835	4,441	80.6	70,408	70.408	0.000	41.4
2/19/15 6:00 PM	2		7,547	71,420	71.420	6,797	4,437	80.4	71,420	71.420	0.000	42.6

© 2017 **OPTERRA** ENERGY SERVICES, INC. Unauthorized use or duplication of this material without the express, written permission of the owner is strictly prohibited.

Hourly Simulation of the Solar Taurus

OPTERRA
ENERGY SERVICES

Taurus 70 CHP Plant Performance														
HRSG capacity = 90,000 lbm/hr														
		7,041,212	7,041	7,595,180	0	7,718	6,018,360				47,533,031	600,431	340,178,465	92,548
		12,103	12	9,236	0	78.4	61,141	78.1%	100%	15,140	7,572	86.2	77,257	50.3
		0.0	0.0	750.0	0.0	0.0	0.0	52.2%	0%	11,381	0	0.0	0	0.0
		804	1	867	0	0.9	687	70.9%	72%	12,723	5,426	68.5	38,833	10.6
EMU Data		CHP Facility Totals							Taurus 70, Run Hours = 8614					
Hours	Temp, °F	Excess Steam, lb/hr	Excess Thermal Diverted, MMBTH	Electricity from Grid, kWhrs	Power Exported, kWhrs	Auxiliary Boiler Fuel, MMBtu/hr (HHV)	Auxiliary Boiler Steam, lb/hr	CHP Plant Efficiency, % (HHV)	Load, %	GT Heat Rate, Btu/kWHR	Net kWhrs	Fuel, MMBtu/hr (HHV)	HRSG Net Steam, lb/hr	Duct Burner Fuel, MMBtu/hr (HHV)
Peak Electric Day														
9/4/14 7:00 AM	56	9,035	9.035	750	0	0	0	56.8%	87%	11,723	6,505	76.3	30,189	0.0
9/4/14 8:00 AM	61	3,505	3.505	750	0	0	0	64.7%	96%	11,575	7,029	81.4	32,120	0.0
9/4/14 9:00 AM	67	1,777	1.777	1,199	0	0	0	67.7%	100%	11,575	7,137	82.6	33,342	0.0
9/4/14 10:00 AM	74	1,473	1.473	1,839	0	0	0	68.3%	100%	11,682	6,911	80.7	33,024	0.0
9/4/14 11:00 AM	79	285	0.285	2,345	0	0	0	70.0%	100%	11,767	6,746	79.4	32,795	0.0
9/4/14 12:00 PM	81	188	0.188	2,758	0	0	0	70.2%	100%	11,810	6,678	78.9	32,731	0.0
9/4/14 1:00 PM	83	709	0.709	2,968	0	0	0	69.6%	100%	11,856	6,608	78.3	32,675	0.0
9/4/14 2:00 PM	85	950	0.950	3,164	0	0	0	69.4%	100%	11,902	6,539	77.8	32,614	0.0
9/4/14 3:00 PM	85	1,172	1.172	3,303	0	0	0	69.1%	100%	11,902	6,539	77.8	32,614	0.0
9/4/14 4:00 PM	86	1,058	1.058	3,168	0	0	0	69.3%	100%	11,925	6,505	77.6	32,581	0.0
9/4/14 5:00 PM	85	848	0.848	2,818	0	0	0	69.5%	100%	11,902	6,539	77.8	32,614	0.0
9/4/14 6:00 PM	81	587	0.587	2,648	0	0	0	69.7%	100%	11,810	6,678	78.9	32,731	0.0
Peak Thermal Day'														
2/19/15 7:00 AM	-6	0	0.000	750	0	0	0	76.9%	61%	13,259	5,357	71.0	67,811	40.9
2/19/15 8:00 AM	-6	0	0.000	750	0	0	0	77.3%	63%	13,077	5,523	72.2	71,886	45.1
2/19/15 9:00 AM	-4	0	0.000	750	0	0	0	77.8%	66%	12,834	5,742	73.7	76,242	49.6
2/19/15 10:00 AM	-3	0	0.000	750	0	0	0	77.8%	67%	12,671	5,894	74.7	77,089	50.3
2/19/15 11:00 AM	2	0	0.000	750	0	0	0	77.8%	73%	12,261	6,282	77.0	77,257	49.9
2/19/15 12:00 PM	4	0	0.000	750	0	0	0	77.4%	77%	11,944	6,634	79.2	74,830	46.7
2/19/15 1:00 PM	4	0	0.000	750	0	0	0	77.2%	78%	11,859	6,745	80.0	73,010	44.5
2/19/15 2:00 PM	4	0	0.000	750	0	0	0	77.1%	79%	11,823	6,794	80.3	72,734	44.1
2/19/15 3:00 PM	4	0	0.000	750	0	0	0	77.1%	79%	11,847	6,762	80.1	72,803	44.2
2/19/15 4:00 PM	4	0	0.000	750	0	0	0	76.9%	80%	11,761	6,878	80.9	71,481	42.6
2/19/15 5:00 PM	4	0	0.000	750	0	0	0	76.8%	79%	11,792	6,835	80.6	70,408	41.4
2/19/15 6:00 PM	2	0	0.000	750	0	0	0	76.9%	79%	11,835	6,797	80.4	71,420	42.6

© 2017 OPTERRA ENERGY SERVICES, INC. Unauthorized use or duplication of this material without the express, written permission of the owner is strictly prohibited.

Peak Electric Day Performance

OPTERRA
ENERGY SERVICES

Peak Electric

September 4, 2014

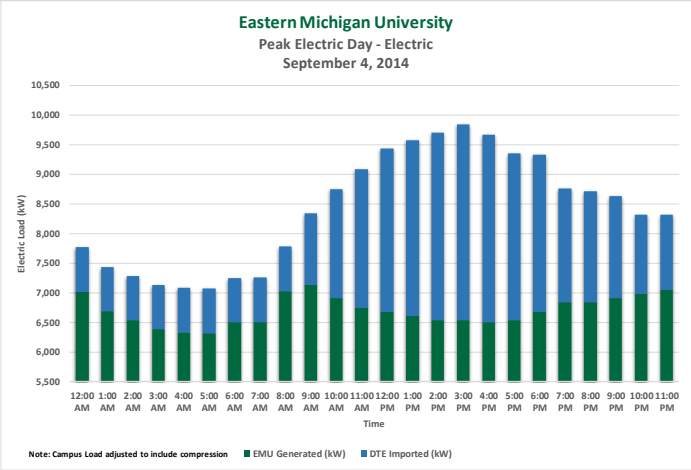

Thermal

September 4, 2014

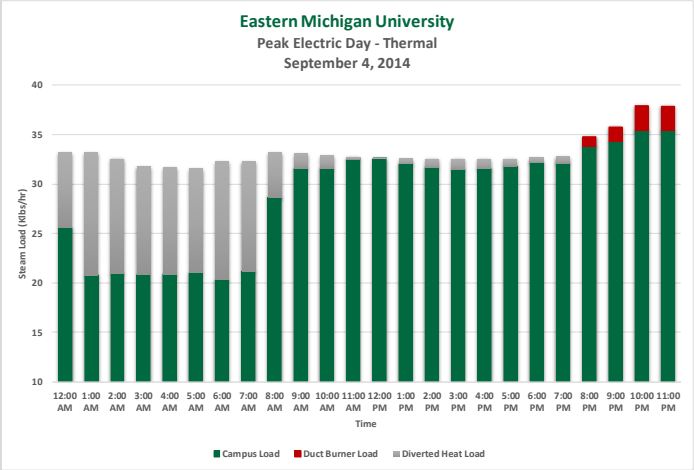

© 2017 **OPTERRA** ENERGY SERVICES, INC. Unauthorized use or duplication of this material without the express, written permission of the owner is strictly prohibited.

Peak Thermal Day Performance

OPTERRA
ENERGY SERVICES

Peak Thermal

February 19, 2015

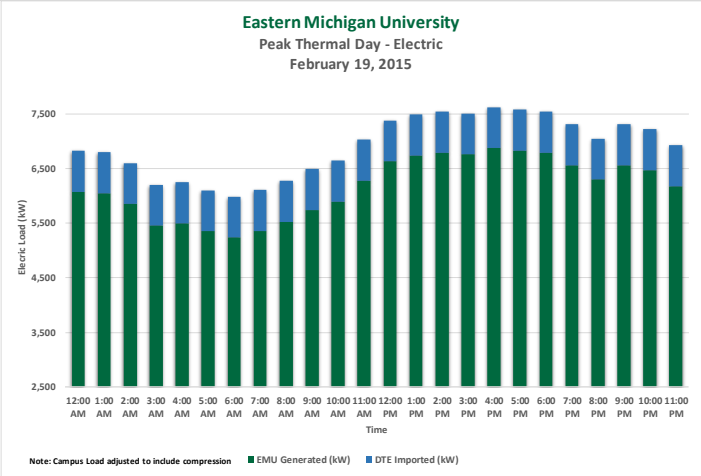

Electric

February 19, 2015

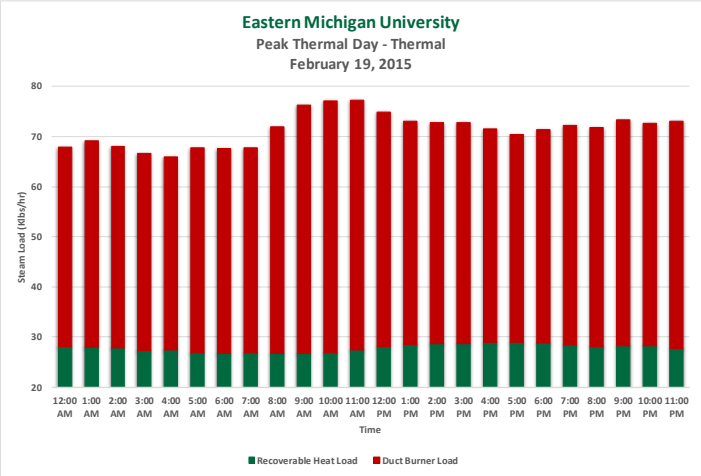

© 2017 **OPTERRA** ENERGY SERVICES, INC. Unauthorized use or duplication of this material without the express, written permission of the owner is strictly prohibited.

Coral Substation One-Line

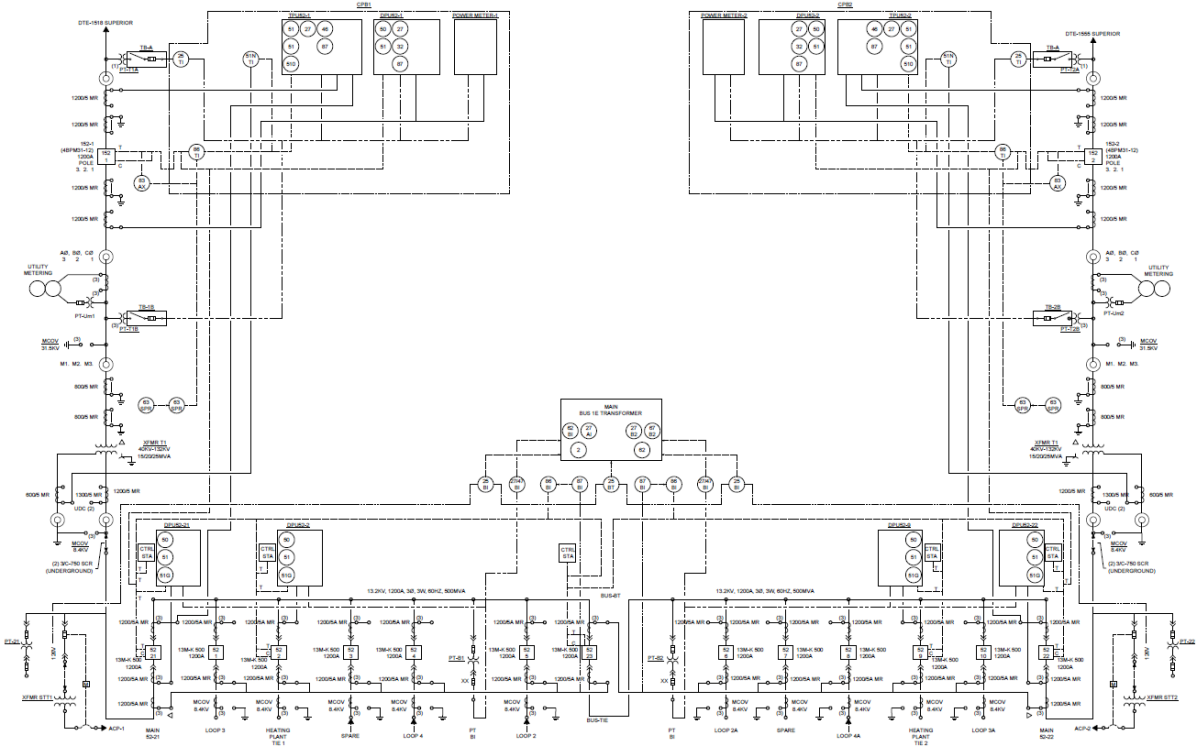

© 2017 **OPTERRA** ENERGY SERVICES, INC. Unauthorized use or duplication of this material without the express, written permission of the owner is strictly prohibited.

New Heating Plant 15 kV One-Line

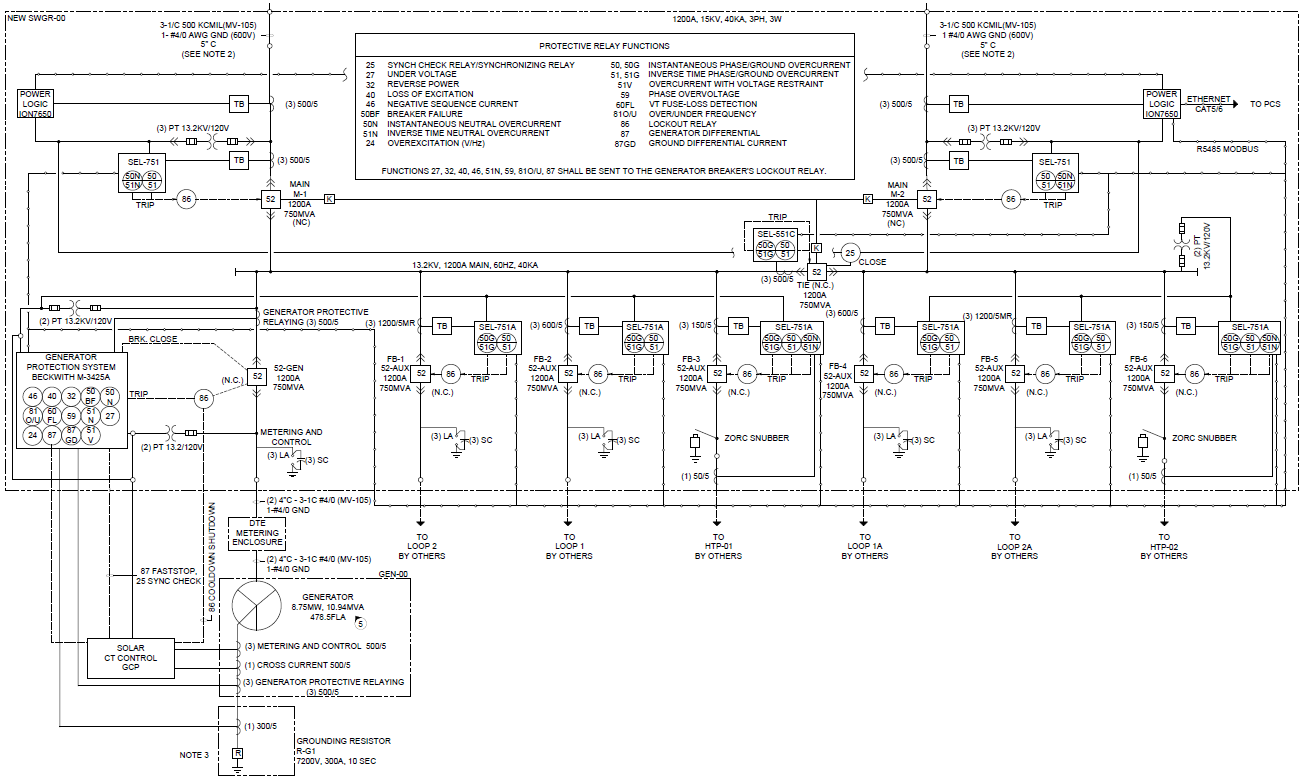

© 2017 **OPTERRA** ENERGY SERVICES, INC. Unauthorized use or duplication of this material without the express, written permission of the owner is strictly prohibited.